OLIMPIA SPLENDID
HOME OF COMFORT
SERVICE

CODICE	DESCRIZIONE	DESCRIPTION	POS.	GR.
K070024296C	BASE PIU	BASIS	1	
279306A	RUOTA A FORCELLA MOD.DF DIAM.30	WHEEL DIAMETER 30 MM	2	
K190000500A	TAPPO SCARICO ACQUA	DRAINING DISCHARGE CAP	3	
K070024396A	PIASTRA FISSAGGIO MOTORE SCARICO CO	DRAINING MOTOR FIXING PLATE	4	
K210023100A	MOTORE SCARICO CONDENSA	DRAINING MOTOR	5	
K070024496A	GIRANTE PIU	WATER PUMP RUNNER	6	
276058A	SENSORE ELETTR. LIVELLO ACP-08-B	ELECTRICAL SENSOR	7	
K070024596A	COPERCHIO TANICA PIU	WATER TANK COVER	8	
K260005100A	CONVOGLIATORE EPS CON UGELLO	EPS CONVEYOR WITH NOZZLE	9	
K260005200A	CONVOGLIATORE EPS MOTORE PIU	EPS MOTOR CONVEYOR	10	
K070024696A	VENTOLA CENTRIFUGA D.200	CENTRIFUGAL FAN D.200	11	
J060005700A	MOTORE VENTOLA COND.YDK30-4T-8	CONDENSER FAN MOTOR	12	
K070024796C	STAFFA SUPPORTO MOTORE PIU	MOTOR MOUNT BRACKET	13	
J060004100A	MOTORE VENTOLA EVAPORANTE	EVAPORATOR FAN MOTOR	14	
K060003900A	VENTOLA TANGENZIALE D.135X264	TANGENTIAL FAN D.135X264	15	
K260005300B	CONVOGLIATORE EPS INFERIORE PIU	EPS LOWER CONVEYOR	16	
279253A	CONVOGLIATORE ARIA SUPERIORE	UPPER CONVEYOR	17	
279391A	SUPPORTO ELASTICO VENTOLA(03S0038)	FAN ELASTIC MOUNT	18	
279392A	CUSCINETTO IN TEFLON(ELY 03S0039)	TEFLON BEARING	19	
K070024896B	STAFFA BLOCCAGGIO MOTORE	MOTOR LOCKING BRACKET	21	
K210019200A	CONDENSATORE 1,2 MF	CAPACITOR MF 1,2	22	
K160005000B	CABLAGGIO CONDENSATORE	CAPACITOR WIRING	23	
RD0183	SCHEDA ELETTRONICA	POWER BOARD	24	
K070024996B	TANICA CONDENSA INTERMEDIA	INTERMEDIATE WATER CONTAINER	25	G0545A
K090014500A	COIBENTANTE DX TANICA INTERM.	RIGHT INTERMEDIATE WATER CONTAINER	25	G0545A
K090014600A	COIBENTANTE SX TANICA INTERM.	LEFT INTERMEDIATE WATER CONTAINER I	25	G0545A
275964A	CONDENS. MF 25	CAPACITOR 25 mF DOUBLE FASTON	26	
275977A	CONDENSATORE MF 3,15 CODOLO-FAST.DO	CAPACITOR 3,15 mF DOUBLE FASTON	27	
598864A71	GR TUBO FLESSIBILE	AIR OUTLET PIPE ASSEMBLY	28	
K070025093A	CONVOGLIATORE FINESTRA PIU	WINDOWS CONVEYOR	29	
281727A75	FLANGIA PER TUBO(KOSTIL TRASP)	TRANSPARENT FLANGE FOR PIPE	30	
281726A75	TAPPO FLANGIA(KOSTIL TRASP.)	TRANSPARENT FLANGE CAP	31	
592501A90	GR VENTOSA BLOCCA FINES.CLIM.	SUCTION CUP AND CORD ASSEMBLY	32	
282662A206	PANNELLO FRONTALE RAL9003	FRONT PANEL	33	
K070025272A	FIANCO DX PIU	RIGHT PLASTIC SIDE FRAME	34	
K070025372A	FIANCO SX PIU	LEFT PLASTIC SIDE FRAME	35	
282665A165	PANNELLO SUPERIORE PANTONE 334 C	FRONT PANEL UPPER DOME	36	
RD0192	GRUPPO DISPLAY	DISPLAY ASSY	37	
282663A206	GRIGLIA PANNELLO FRONTALE RAL9003	FRONT PANEL GRID	38	
K070044972A	COPERTURA POSTERIORE	REAR COVER	39	G0676A
K090014700A	ANELLO GUARNIZIONE RETRO	REAR PANEL GASKET RING	39	G0676A
K070025852A	FILTRO	FILTER	40	
282664A	PANNELLO DISPLAY	DISPLAY PANEL	41	
K070026496B	GUIDA DX FILTRO	RIGHT FILTER SADDLE	42	
K070026596A	GUIDA SX FILTRO	LEFT FILTER SADDLE	43	
L160016600A	GR.CAVO ALIMENTAZIONE	PIU' POWER CORD ASSEMBLY	44	
276210A	MORSETTIERA 3 POLI PA27	ELETTROGIBI 3 POLES PA27 TERMINAL B	45	
279386B	FISSACAVO PIATTO INT.18 MM	FLAT CABLE FASTENER I.D.18 MM	46	
K160024100A	CABLAGGIO GENERALE	WIRING ASSEMBLY	47	
K200006300B	TELECOMANDO	REMOTE CONTROLLER	50	
K210023600A	CABLAGGIO SONDA CONDENSA	WATER PROBE WIRING	52	
277800A	COMPRESSORE GMCC ASN82V1UDZ	COMPRESSOR GMCC ASN82V1UDZ	53	
277756A	SENSORE DI TEMPERATURA	TEMPERATURE SENSOR	54	
K030003800A	BATTERIA EVAPORANTE	EVAPORATOR HEAT EXCHANGER	55	
K100035600C	TUBO PREMENTE	DISCHARGE PIPE	56	
K100037000E	TUBO ASPIRANTE	SUCTION PIPE	57	
K100037100B	TUBO USCITA EVAPORANTE PIU	EVAPORATOR OUTLET PIPE	58	
K100035900A	TUBO USCITA CONDENSANTE+CAPILLARE	CONDENSER OUTLET PIPE+CAPILLARY	59	
K100036000B	TUBO INGRESSO CONDENSANTE	CONDENSER INLET PIPE	60	
K100036100A	TUBO INGRESSO EVAPORANTE	EVAPORATOR INLET PIPE	61	
K030005000A	BATTERIA CONDENSANTE	CONDENSER HEAT EXCHANGER	62	
K070039300A	RIMANDO FLAP	FLAP INTERMEDIATE CONTROL	63	
282668A206	FLAP CENTRALE RAL9003	central flap	64	
282669A206	FLAP LATERALE RAL9003	lateral flap	65	
282666A206	GRIGLIA USCITA ARIA RAL9003	outlet air gril	66	
K210027700A	INTERRUTTORE ON-OFF	ON-OFF SWITCH	67	

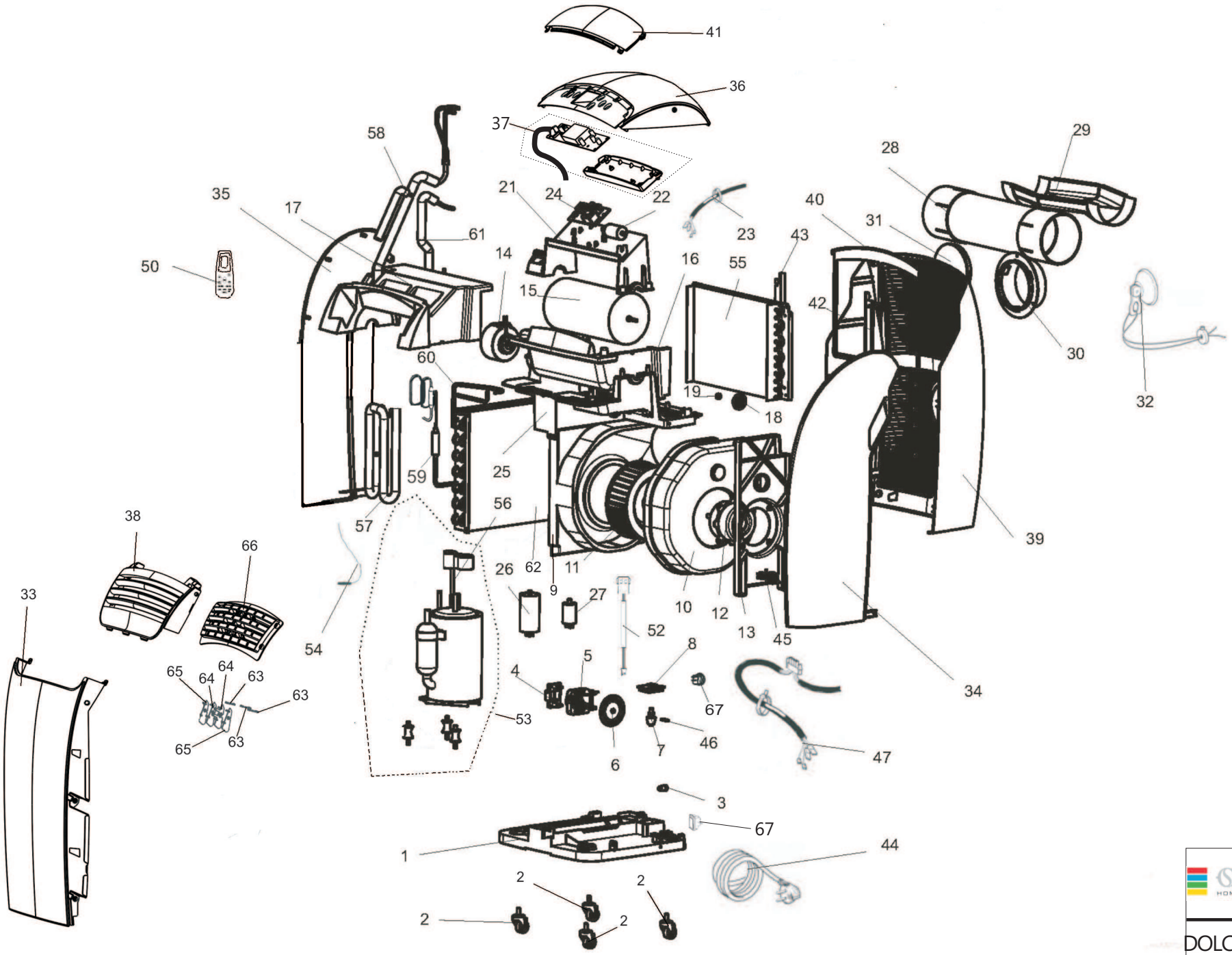

OLIMPIA SPLENDID HOME OF COMFORT Via Industriale 1/3 Cellatica (BS)

DOLCECLIMA SILENT 11 A+

Agg. Marzo 2017- RIF: 198.00